Air valve(3/2 way)

3A100 Series

Symbol

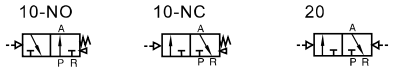

Product feature

1. Structure in sliding column mode: good tightness and sensitive reaction.
2. Double air control valves have memory function.
3. Internal hole adopts special processing technology which has little attrition friction, low start pressure and long service life.
4. No need to add oil for lubrication.
5. Multi-mounting helps to install and apply.
6. Integrate with the manifold to save installation space.

Flow chart

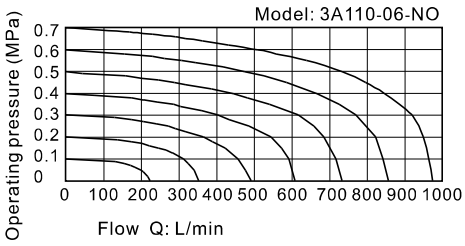

Specification

Model	3A110-M5	3A120-M5	3A110-06	3A120-06
Fluid	Air(to be filtered by 40μm filter element)			
Acting	Exterior control			
Port size [Note1]	M5		1/8"	
Orifice size	5.5mm²(Cv=0.31)		12.0mm²(Cv=0.67)	
Valve type	3 port 2 position			
Lubrication [Note2]	Not required			
Operating pressure	0.15~0.8MPa(21~114psi)			
Proof pressure	1.2MPa(175psi)			
Temperature	-20~70℃			
Material of body	Aluminum alloy			
Max. frequency [Note3]	5 cycle/sec			

[Note1] G thread is available.
[Note2] Once lubricated air is used, continue with same medium to optimise valve life span. Lubricants like ISO VG32 or equivalent are recommended.
[Note3] The maximum actuation frequency is in the no-load state.

Ordering code

3A 1 10 06 NO G

(1) (2) (3) (4) (5) (6)

①Model	②Code	③Valve type	④Port size	⑤Acting type	⑥Thread type	
3A: Air Valve (3/2 way)	1: 100 Series	10: Single air control	M5: M5 06: 1/8"	NC: Normally close NO: Normally open	M5	1/8"
		20: Double air control		No this code	No this code	G: G

Please refer to 83 for manifold specification and the order way.

Inner structure

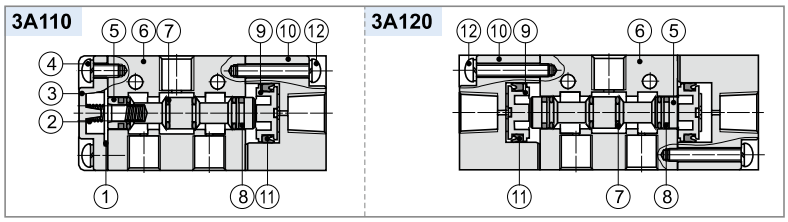

No.	Item	No.	Item	No.	Item
1	Bottom cover gasket	5	Spool	9	Piston
2	Spring	6	Body	10	Pilot body
3	Bottom cover	7	O-ring	11	Piston O-ring
4	Bottom cover screw	8	Wear ring	12	Piston screw

Dimension

3A110

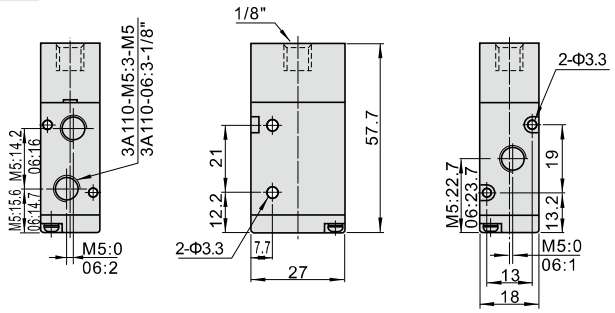
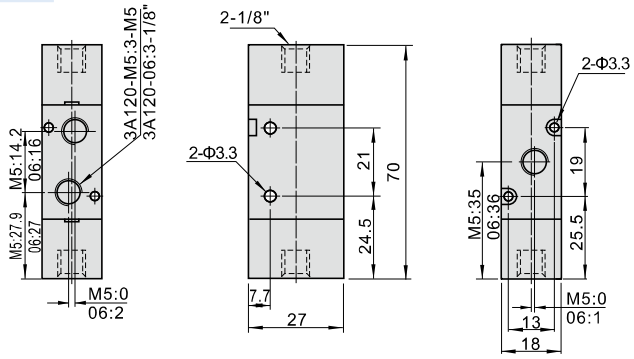
3A120